	REVISED	DR	APP

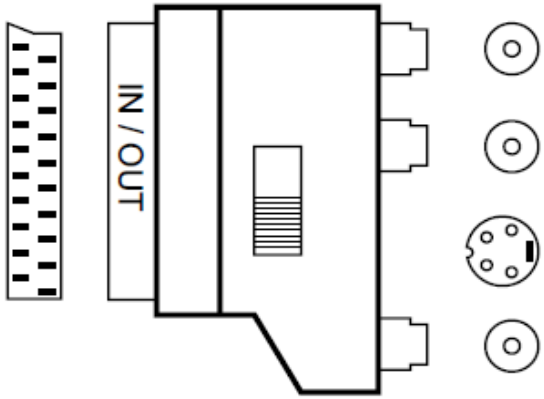

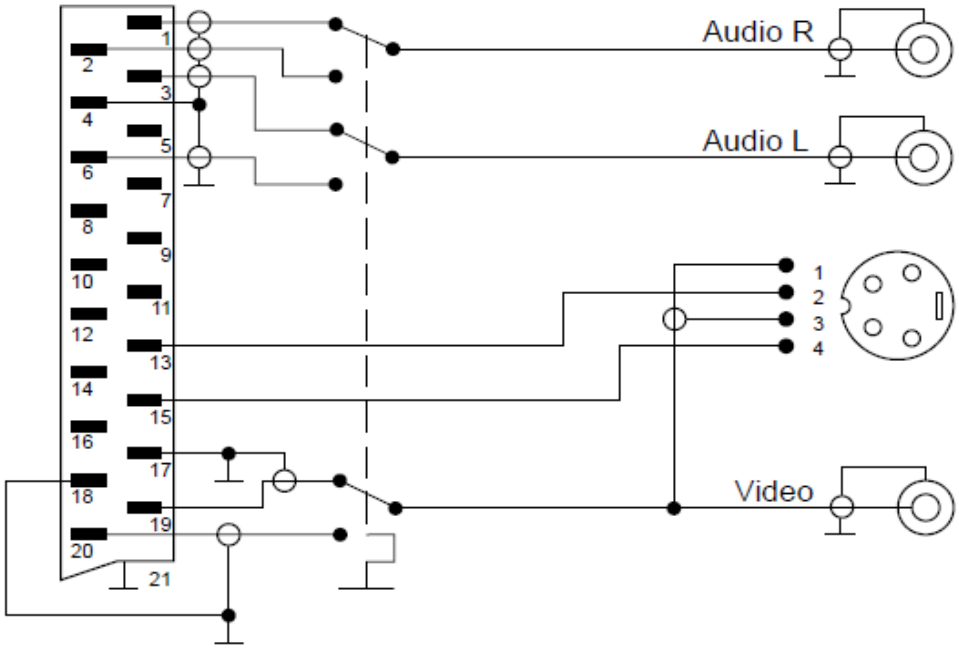

NO	PARTS	DESCRIPTION
3	Imprint	No Imprint
2	Connectors	3 RCA jacks and 4 pin MINI DIN jack
1	Housing	Housing = ABS Black, Assembled, Pins = FeNi, Shield FeNi

RoHS compliant

S-Conn Handels GmbH
Am Mühlberg 8
91477 Markt Bibart
Tel. 09162/ 98 93 8-0
Fax 09162/ 98 93 8-20
info@s-conn.de
S/CONN
maximum connectivity
www.s-conn.de

DESCRIPTION	Scart adaptor with 3 RCA jacks and 4 pin MINI DIN jack						
SIZE	A4	DATE		CHECKED		TOL	94035
UNIT	MM	DRAWN		APPROVED			
CUSTOM TARIF NO.: 85366990990							