RE0131PVB

(Insulated Shaft)
(Bracket Type)

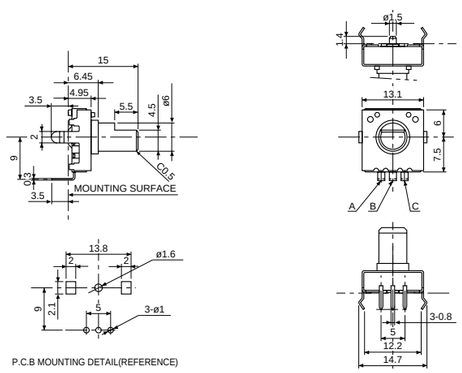

REB161PVB

(Insulated Shaft)

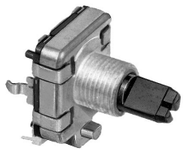

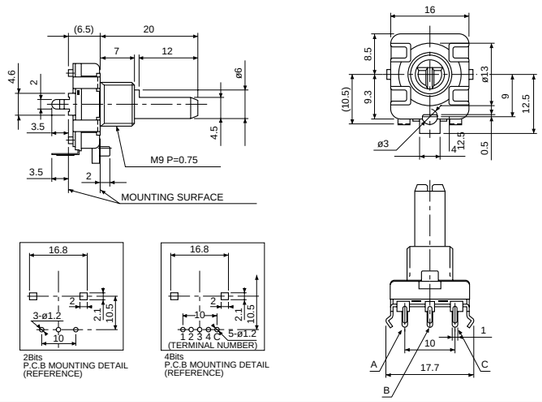

REB161PHD

(Insulated Shaft)

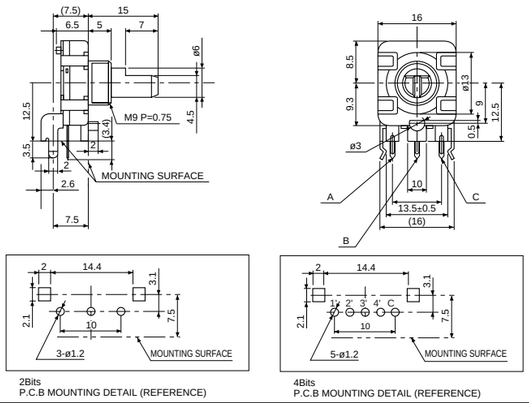

INCREMENTAL OUTPUT SIGNAL (for RE0131)

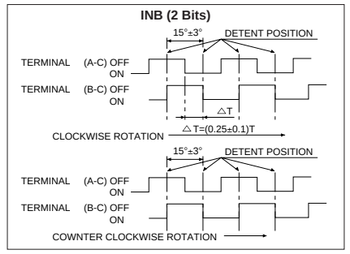

INCREMENTAL OUTPUT SIGNAL (for REB161)

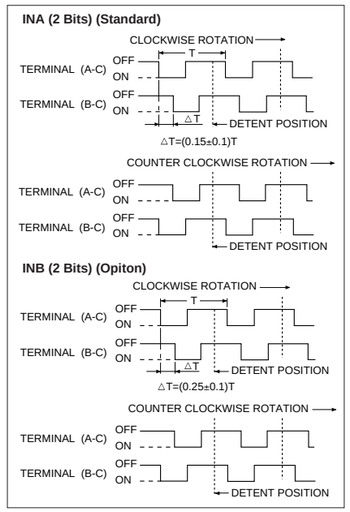

SPECIFICATIONS

	RE0131	REB161	REB161	
Type of Output Signal	INB (2 Bits)	INA, INB (2 Bits)	INA, INB (2 Bits)	GRY (4 Bits)
Operating Temperature Range	–10 to 70°C	–10 to 70°C	–10 to 70°C	
Rated Voltage/Rated Current	DC 5V 0.5mA	DC 5V 0.5mA	DC 5V 0.5mA	DC 12V 4mA
Resolution	12 Pulses/360°	24 Pulses/360°	24 Pulses/360°	4Bits 16 Pulses/360°
Total Rotational Angle	360° Endless	360° Endless	360° Endless	360° Endless
Detent Position and Angle	24 Detents 15±3°	24 Detents 15±3°	24 Detents 15±3°	16 Detents 22.5±3°
Detent Torque	1.5 to 15 mN·m	3 to 20 mN·m	3 to 20 mN·m	
Rotational Life	50,000 cycles	100,000 (INA) 50,000 (INB) cycles	100,000 (INA) 50,000 (INB) cycles	50,000 (INA) cycles

● Specifications in this catalog are presented basically for informative purposes.
We request the exchange of official approval drawings before placing order.

REB162PVBS

(With Push-Momentary Switch)

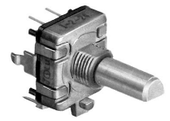

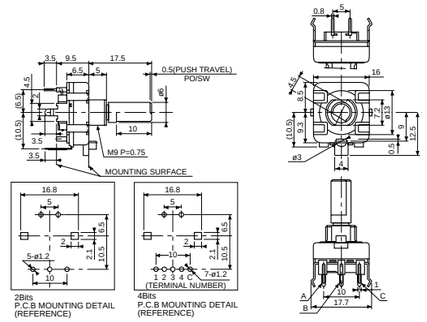

REB202PVBS

(With Push-Momentary Switch)

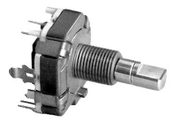

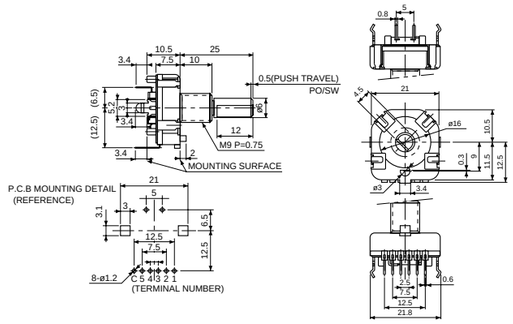

RE0201PVB

(Shaft-less)

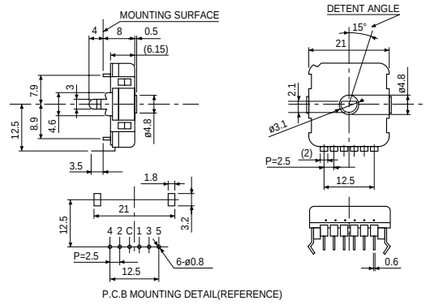

INCREMENTAL OUTPUT SIGNAL (For REB162)

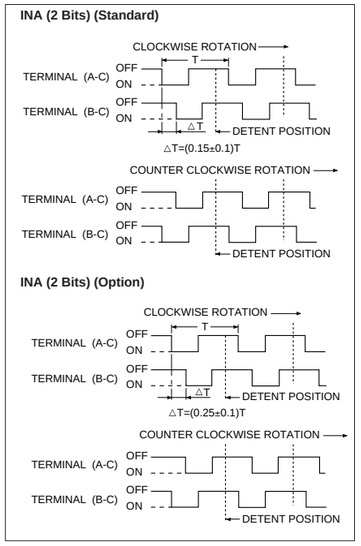

Specification of Push-Momentary Switch (For REB162, REB202)

Circuit	SPST
Rated Voltage/Rated Current	DC 16V 20mA
Contact Resistance	100mΩ max.
Insuration Resistance	10MΩ min. at DC 100V
Withstand Voltage	AC 100V for 1 minute
Push Travel	0.5mm
Operating Force	5 ± 1.5 N
Operational Life	10,000 actuations

OUTPUT SIGNAL (Pulse Type)
GRAY CODE (For REB162, REB202)

Position		1	2	3	4	5	6	7	8	9	10	11	12	13	14	15	16	17	18	19	20	21	22	23	24	25	26	27	28	29	30	31	32
Terminal Number	1		○	○			○	○			○	○			○	○			○	○			○	○			○	○			○	○	
	2			○	○	○	○					○	○	○	○					○	○	○	○					○	○	○	○		
	3					○	○	○	○	○	○	○	○									○	○	○	○	○	○	○	○				
	4									○	○	○	○	○	○	○	○	○	○	○	○	○	○	○	○								
	5																	○	○	○	○	○	○	○	○	○	○	○	○	○	○	○	○

○=ON Terminal Number C=Common

*1, *2: GRAY code for REB162 and REB202 start at the position number 2.

SPECIFICATIONS

	REB162		RE0201	REB202
Type of Output Signal	INA, INB (2 Bits)	GRAY *1 (4 Bits)	GRAY (5 Bits)	GRAY *2 (5 Bits)
Operating Temperature Range	–30 to 80°C	–30 to 80°C	–10 to 70°C	–30 to 80°C
Rated Voltage/Rated Current	DC 5V 0.5mA	DC 12V 4mA	DC 12V 10mA	DC 12V 5mA
Resolution	24 Pulses/360°	15 Positions/300°	24 Positions/360°	31 Positions/300°
Total Rotational Angle	360° Endless	300±5°	360° Endless	300±5°
Detent Position and Angle	24 Detents 15±3°	15 Detents 21.4±5°	24 Detents 15±3°	31 Detents 10±3°
Detent Torque	5 to 25 mN·m	5 to 25 mN·m	10 to 30 mN·m	15 to 35 mN·m
Rotational Life	50,000 cycles	30,000 cycles	10,000 cycles	30,000 cycles

● Specifications in this catalog are presented basically for informative purposes.
We request the exchange of official approval drawings before placing order.