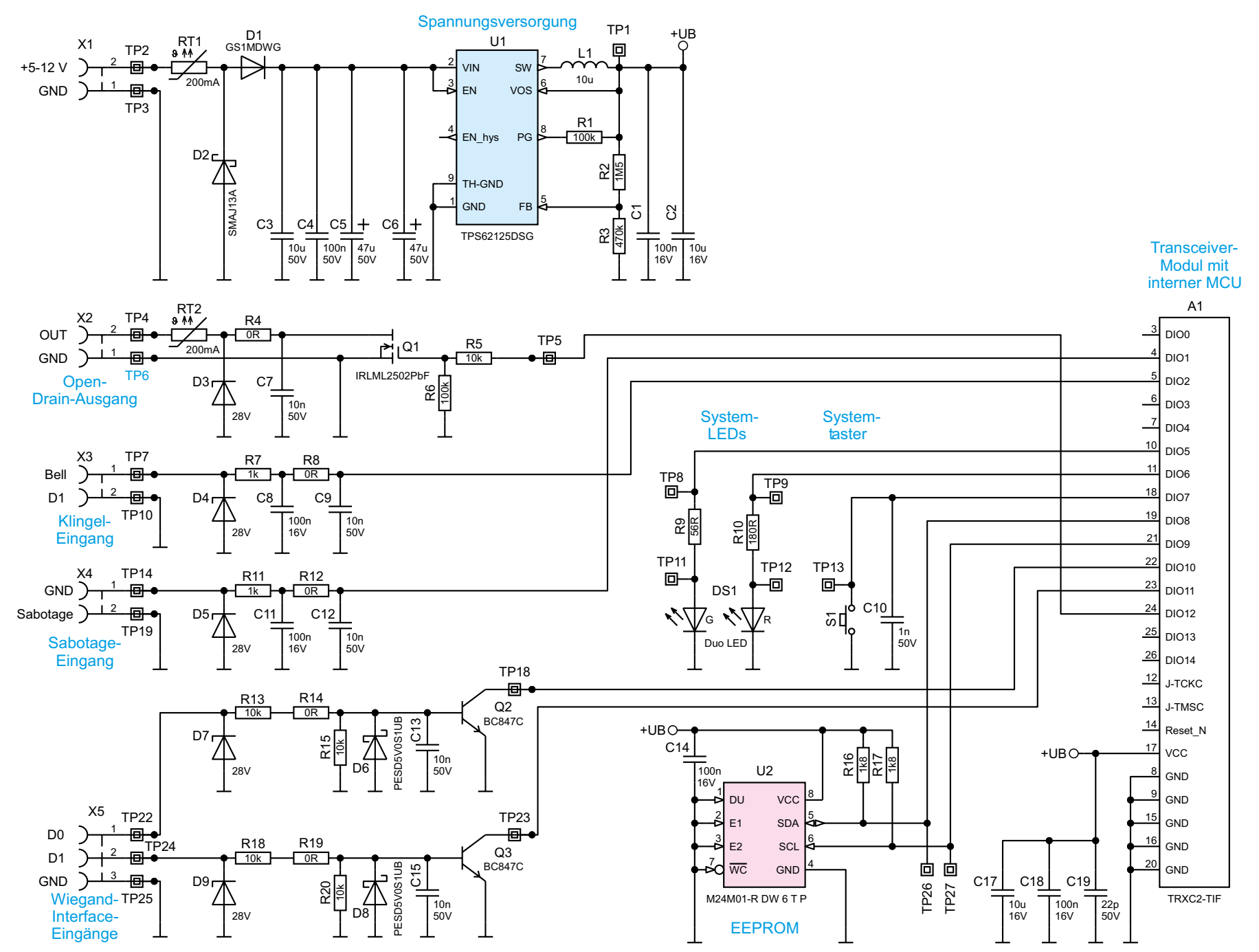
Spannungsversorgung
X1
+5-12 V
GND
TP2
TP3
RT1
200mA
D1
GS1MDWG
D2
SMAJ13A
C3
10u
50V
C4
100n
50V
C5
47u
50V
C6
47u
50V
U1
VIN
EN
EN_hys
TH-GND
GND
SW
VOS
PG
FB
TPS62125DSG
L1
10u
TP1
+UB
R1
100k
R2
1M5
R3
470k
C1
100n
16V
C2
10u
16V
Transceiver-
Modul mit
interner MCU
A1
X2
OUT
GND
TP4
TP6
Open-
Drain-Ausgang
RT2
200mA
R4
0R
D3
28V
C7
10n
50V
Q1
IRLML2502PbF
R5
10k
R6
100k
TP5
X3
Bell
D1
TP7
TP10
Klingel-
Eingang
R7
1k
R8
0R
D4
28V
C8
100n
16V
C9
10n
50V
X4
GND
Sabotage
TP14
TP19
Sabotage-
Eingang
R11
1k
R12
0R
D5
28V
C11
100n
16V
C12
10n
50V
System-
LEDs
System-
taster
TP8
TP9
R9
56R
R10
180R
TP11
TP12
TP13
DS1
G
R
Duo LED
S1
C10
1n
50V
TP18
Q2
BC847C
R13
10k
R14
0R
D7
28V
R15
10k
D6
PESD5V0S1UB
C13
10n
50V
X5
D0
D1
GND
TP22
TP24
TP25
Wiegand-
Interface-
Eingänge
R18
10k
R19
0R
D9
28V
R20
10k
D8
PESD5V0S1UB
C15
10n
50V
TP23
Q3
BC847C
+UB
C14
100n
16V
U2
DU
E1
E2
WC
VCC
SDA
SCL
GND
M24M01-R DW 6 T P
EEPROM
R16
1k8
R17
1k8
TP26
TP27
C17
10u
16V
C18
100n
16V
C19
22p
50V
DIO0
DIO1
DIO2
DIO3
DIO4
DIO5
DIO6
DIO7
DIO8
DIO9
DIO10
DIO11
DIO12
DIO13
DIO14
J-TCKC
J-TMSC
Reset_N
VCC
GND
TRXC2-TIF