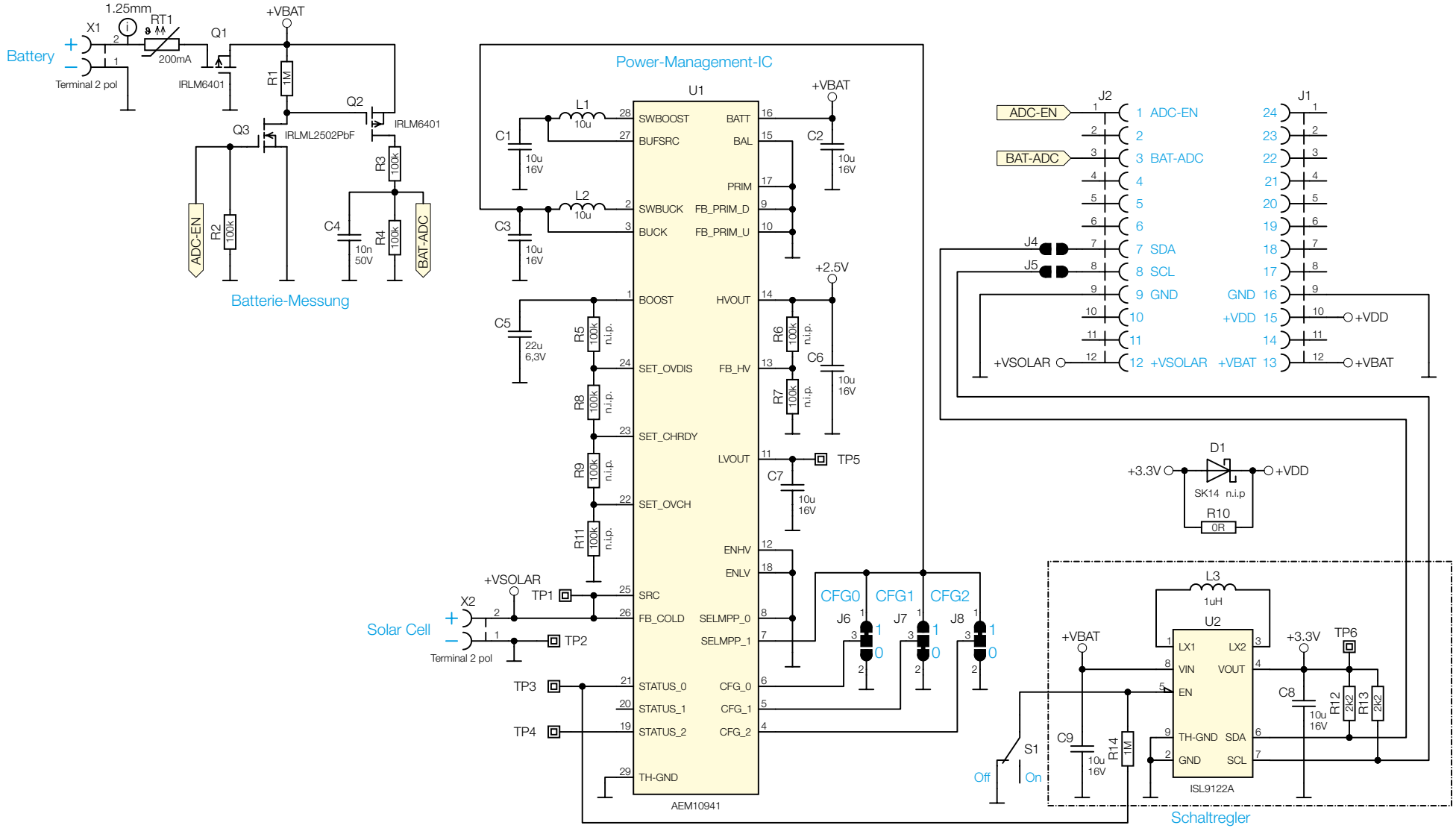
Battery
X1
1.25mm
RT1
200mA
Terminal 2 pol
Q1
IRLM6401
+VBAT
R1
1M
Q2
IRLM6401
Q3
IRLML2502PbF
R3
100k
R2
100k
C4
10n
50V
R4
100k
ADC-EN
BAT-ADC
Batterie-Messung
Power-Management-IC
U1
L1
10u
L2
10u
C1
10u
16V
C3
10u
16V
C5
22u
6,3V
SWBOOST
BUFSRC
SWBUCK
BUCK
BOOST
SET_OVDIS
SET_CHRDY
SET_OVCH
SRC
FB_COLD
STATUS_0
STATUS_1
STATUS_2
TH-GND
BATT
BAL
PRIM
FB_PRIM_D
FB_PRIM_U
HVOUT
FB_HV
LVOUT
ENHV
ENLV
SELMPP_0
SELMPP_1
CFG_0
CFG_1
CFG_2
AEM10941
+VBAT
C2
10u
16V
+2.5V
R6
100k
n.i.p.
R7
100k
n.i.p.
C6
10u
16V
TP5
C7
10u
16V
R5
100k
n.i.p.
R8
100k
n.i.p.
R9
100k
n.i.p.
R11
100k
n.i.p.
+VSOLAR
TP1
X2
Solar Cell
TP2
Terminal 2 pol
TP3
TP4
CFG0
CFG1
CFG2
J6
J7
J8
J2
ADC-EN
BAT-ADC
J4
J5
+VSOLAR
J1
GND
+VDD
+VBAT
D1
+3.3V
+VDD
SK14 n.i.p
R10
0R
L3
1uH
U2
LX1
LX2
VIN
VOUT
EN
TH-GND
SDA
GND
SCL
ISL9122A
+VBAT
+3.3V
TP6
C8
10u
16V
R12
2k2
R13
2k2
C9
10u
16V
R14
1M
S1
Off
On
Schaltregler