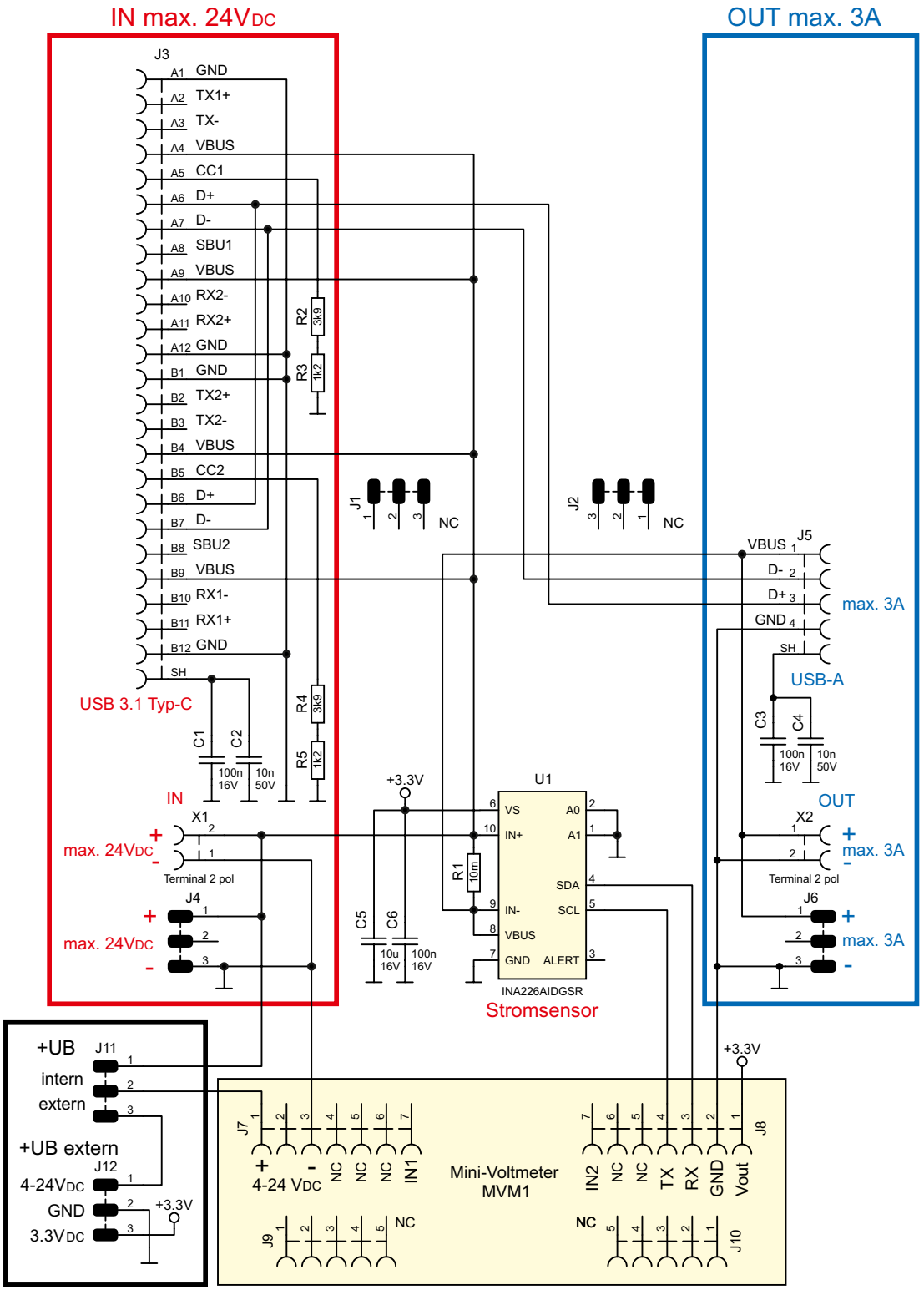
IN max. 24VDC
OUT max. 3A
J3
A1 GND
A2 TX1+
A3 TX-
A4 VBUS
A5 CC1
A6 D+
A7 D-
A8 SBU1
A9 VBUS
A10 RX2-
A11 RX2+
A12 GND
B1 GND
B2 TX2+
B3 TX2-
B4 VBUS
B5 CC2
B6 D+
B7 D-
B8 SBU2
B9 VBUS
B10 RX1-
B11 RX1+
B12 GND
SH
USB 3.1 Typ-C
R2 3k9
R3 1k2
R4 3k9
R5 1k2
C1 100n 16V
C2 10n 50V
J1
NC
J2
NC
J5
VBUS
D-
D+
GND
SH
max. 3A
USB-A
C3 100n 16V
C4 10n 50V
IN
X1
max. 24VDC
Terminal 2 pol
J4
max. 24VDC
+3.3V
U1
VS
IN+
IN-
VBUS
GND
A0
A1
SDA
SCL
ALERT
R1 10m
C5 10u 16V
C6 100n 16V
INA226AIDGSR
Stromsensor
OUT
X2
max. 3A
Terminal 2 pol
J6
max. 3A
+UB
J11
intern
extern
+UB extern
J12
4-24VDC
GND
3.3VDC
+3.3V
J7
4-24 VDC
NC
IN1
Mini-Voltmeter
MVM1
IN2
TX
RX
GND
Vout
J8
J9
NC
J10
NC