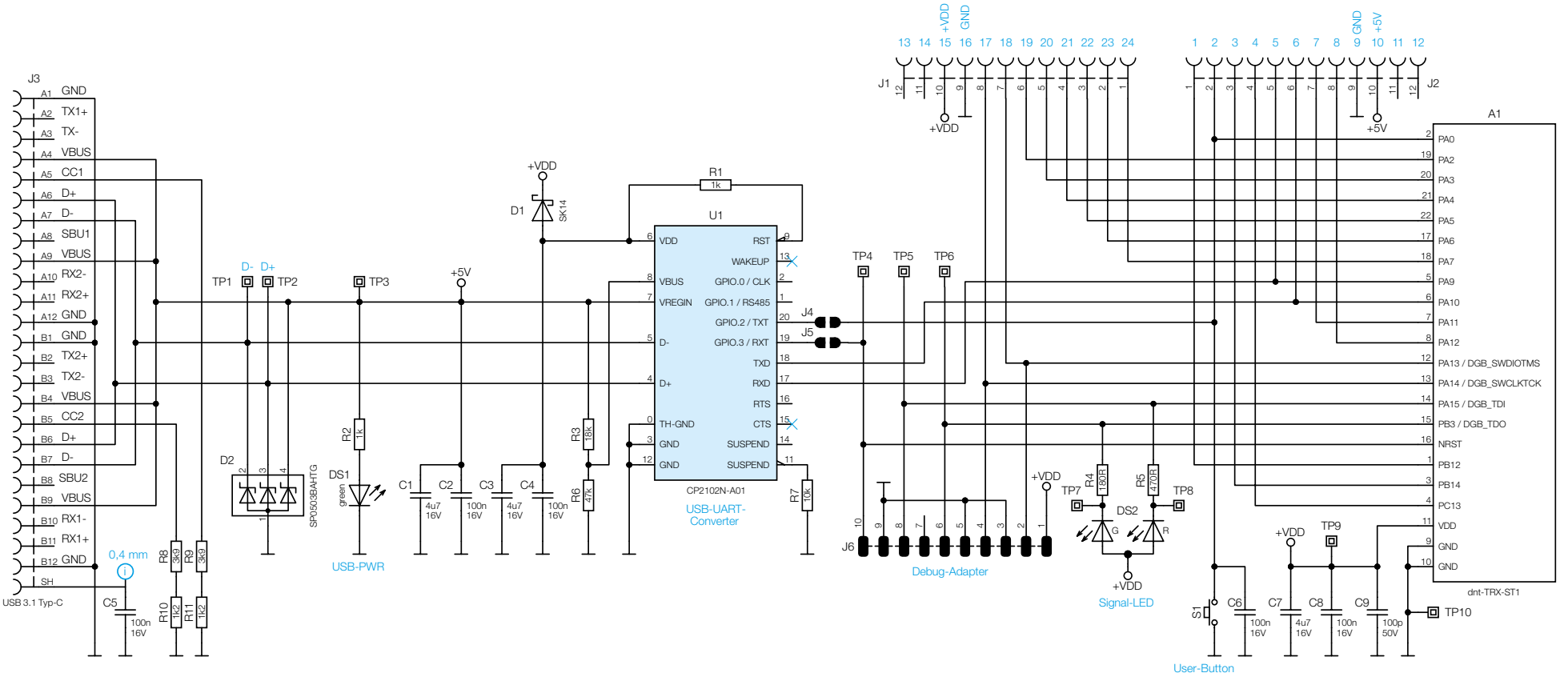

J3
A1 GND
A2 TX1+
A3 TX-
A4 VBUS
A5 CC1
A6 D+
A7 D-
A8 SBU1
A9 VBUS
A10 RX2-
A11 RX2+
A12 GND
B1 GND
B2 TX2+
B3 TX2-
B4 VBUS
B5 CC2
B6 D+
B7 D-
B8 SBU2
B9 VBUS
B10 RX1-
B11 RX1+
B12 GND
SH
USB 3.1 Typ-C
0,4 mm
C5 100n 16V
R8 3k9
R9 3k9
R10 1k2
R11 1k2
TP1
D- D+
TP2
TP3
+5V
D2
SP0503BAHTG
R2 1k
DS1 green
USB-PWR
C1 4u7 16V
C2 100n 16V
C3 4u7 16V
C4 100n 16V
+VDD
D1 SK14
R1 1k
U1
VDD
VBUS
VREGIN
D-
D+
TH-GND
GND
GND
RST
WAKEUP
GPIO.0 / CLK
GPIO.1 / RS485
GPIO.2 / TXT
GPIO.3 / RXT
TXD
RXD
RTS
CTS
SUSPEND
SUSPEND
CP2102N-A01
USB-UART-Converter
R3 18k
R6 47k
R7 10k
J4
J5
TP4
TP5
TP6
J6
Debug-Adapter
+VDD
TP7
R4 180R
R5 470R
TP8
DS2
G
R
+VDD
Signal-LED
J1
+VDD
GND
+5V
J2
+VDD
+5V
A1
PA0
PA2
PA3
PA4
PA5
PA6
PA7
PA9
PA10
PA11
PA12
PA13 / DGB_SWDIOTMS
PA14 / DGB_SWCLKTCK
PA15 / DGB_TDI
PB3 / DGB_TDO
NRST
PB12
PB14
PC13
VDD
GND
GND
dnt-TRX-ST1
S1
C6 100n 16V
C7 4u7 16V
C8 100n 16V
C9 100p 50V
TP9
TP10
User-Button