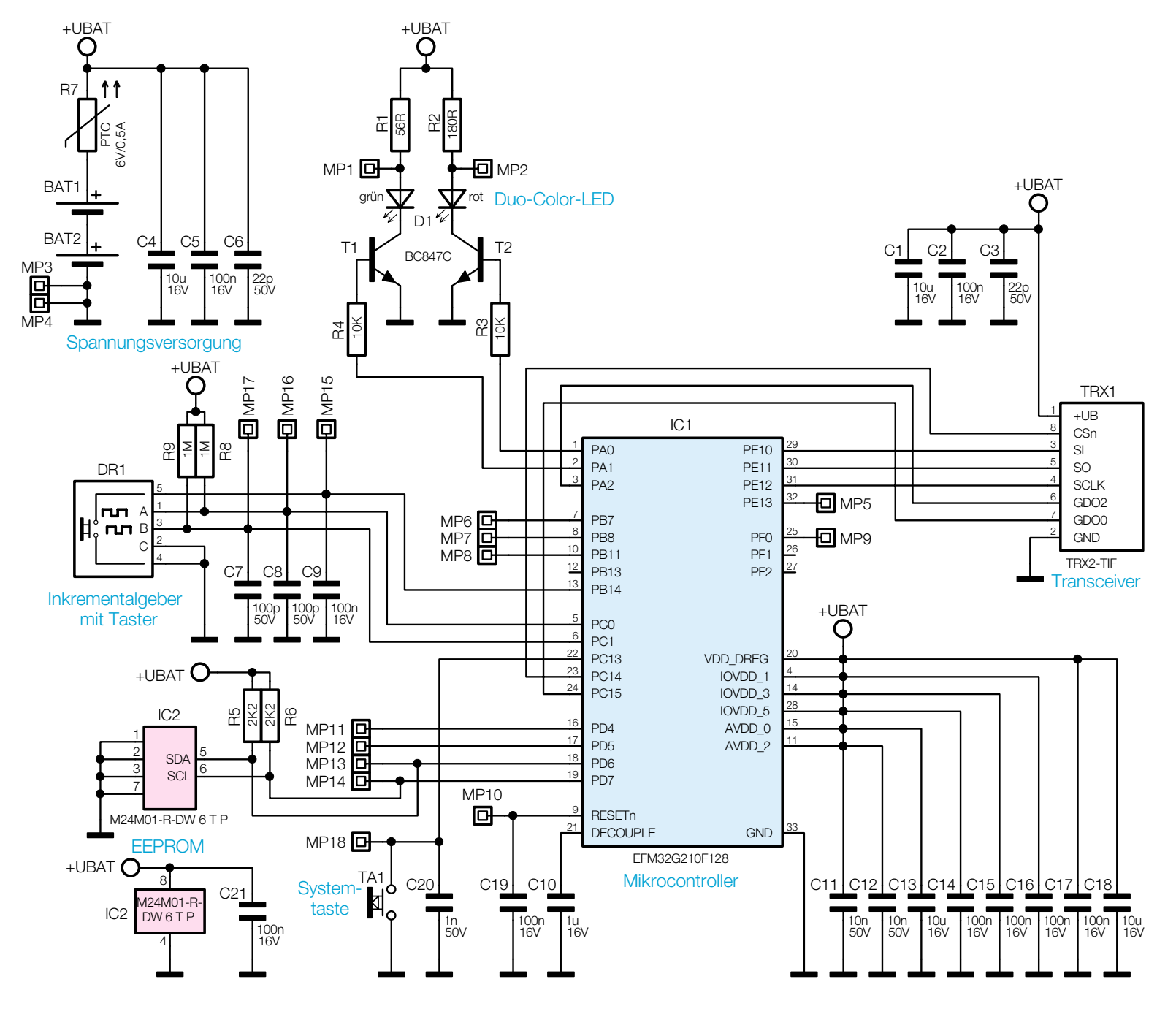
+UBAT
R7
PTC
6V/0,5A
BAT1
BAT2
MP3
MP4
C4
C5
C6
10u
16V
100n
16V
22p
50V
Spannungsversorgung
R1
56R
R2
180R
MP1
MP2
grün
rot
D1
Duo-Color-LED
T1
T2
BC847C
R4
10K
R3
10K
C1
C2
C3
TRX1
+UB
CSn
SI
SO
SCLK
GDO2
GDO0
GND
TRX2-TIF
Transceiver
MP17
MP16
MP15
R9
1M
R8
DR1
A
B
C
Inkrementalgeber
mit Taster
C7
C8
C9
100p
50V
IC1
PA0
PA1
PA2
PB7
PB8
PB11
PB13
PB14
PC0
PC1
PC13
PC14
PC15
PD4
PD5
PD6
PD7
RESETn
DECOUPLE
PE10
PE11
PE12
PE13
PF0
PF1
PF2
VDD_DREG
IOVDD_1
IOVDD_3
IOVDD_5
AVDD_0
AVDD_2
GND
MP5
MP9
MP6
MP7
MP8
EFM32G210F128
Mikrocontroller
IC2
SDA
SCL
R5
2K2
R6
MP11
MP12
MP13
MP14
M24M01-R-DW 6 T P
EEPROM
MP10
MP18
System-
taste
TA1
C20
1n
50V
C19
100n
16V
C10
1u
16V
C21
100n
16V
C11
C12
C13
C14
C15
C16
C17
C18
10n
50V
10u
16V