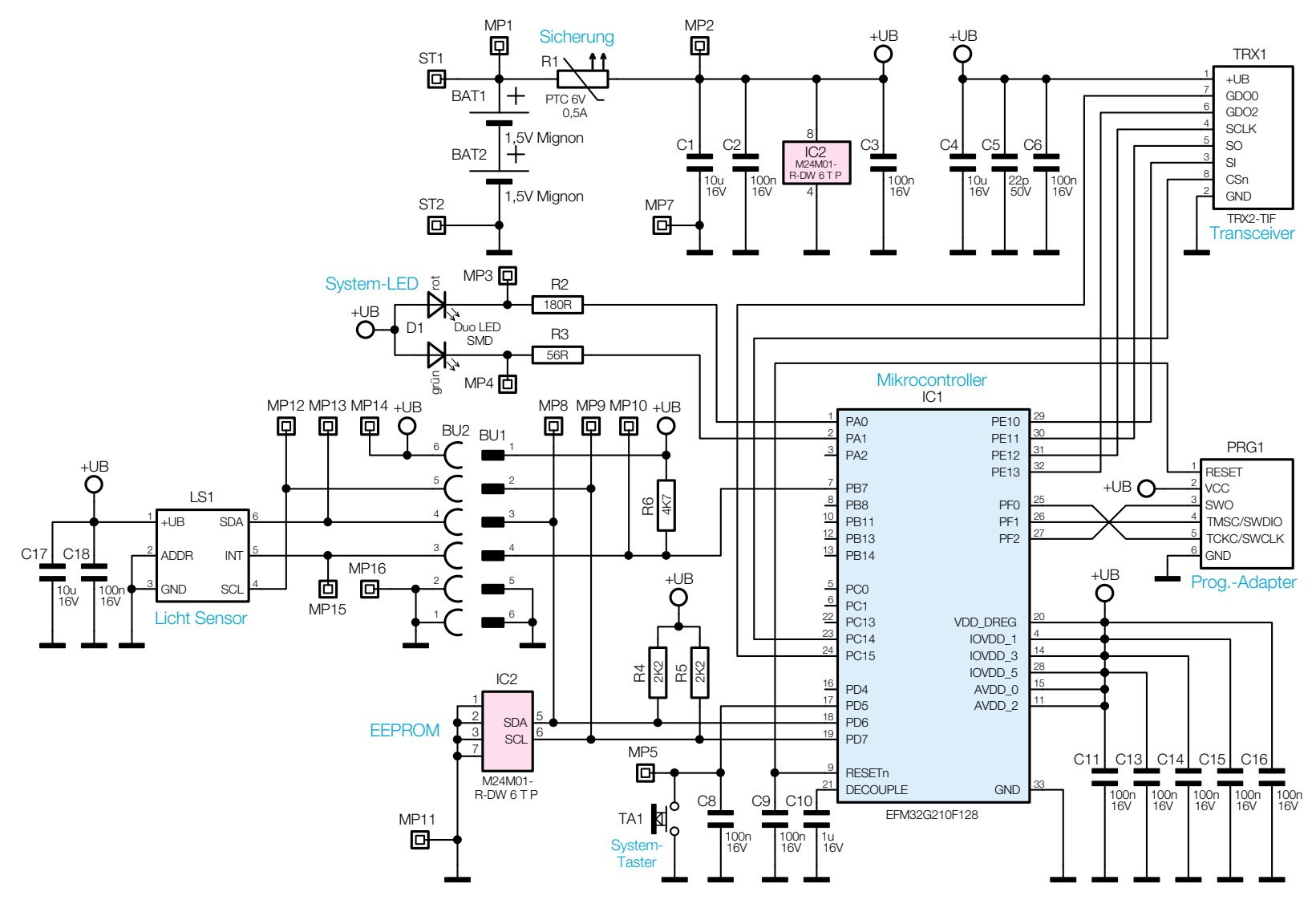
MP1
Sicherung
MP2
+UB
+UB
TRX1
ST1
R1
BAT1
PTC 6V
0,5A
1,5V Mignon
BAT2
1,5V Mignon
ST2
C1
10u
16V
C2
100n
16V
IC2
M24M01-
R-DW 6 T P
C3
100n
16V
C4
10u
16V
C5
22p
50V
C6
100n
16V
MP7
+UB
GDO0
GDO2
SCLK
SO
SI
CSn
GND
TRX2-TIF
Transceiver
System-LED
MP3
R2
180R
rot
+UB
D1
Duo LED
SMD
R3
56R
grün
MP4
Mikrocontroller
IC1
MP12
MP13
MP14
+UB
BU2
BU1
MP8
MP9
MP10
+UB
PA0
PA1
PA2
PB7
PB8
PB11
PB13
PB14
PC0
PC1
PC13
PC14
PC15
PD4
PD5
PD6
PD7
RESETn
DECOUPLE
PE10
PE11
PE12
PE13
PF0
PF1
PF2
VDD_DREG
IOVDD_1
IOVDD_3
IOVDD_5
AVDD_0
AVDD_2
GND
EFM32G210F128
PRG1
RESET
VCC
SWO
TMSC/SWDIO
TCKC/SWCLK
GND
+UB
Prog.-Adapter
+UB
LS1
+UB
SDA
ADDR
INT
GND
SCL
C17
10u
16V
C18
100n
16V
Licht Sensor
MP15
MP16
R6
4K7
+UB
R4
2K2
R5
2K2
IC2
EEPROM
SDA
SCL
M24M01-
R-DW 6 T P
MP11
MP5
TA1
System-
Taster
C8
100n
16V
C9
100n
16V
C10
1u
16V
+UB
C11
100n
16V
C13
100n
16V
C14
100n
16V
C15
100n
16V
C16
100n
16V