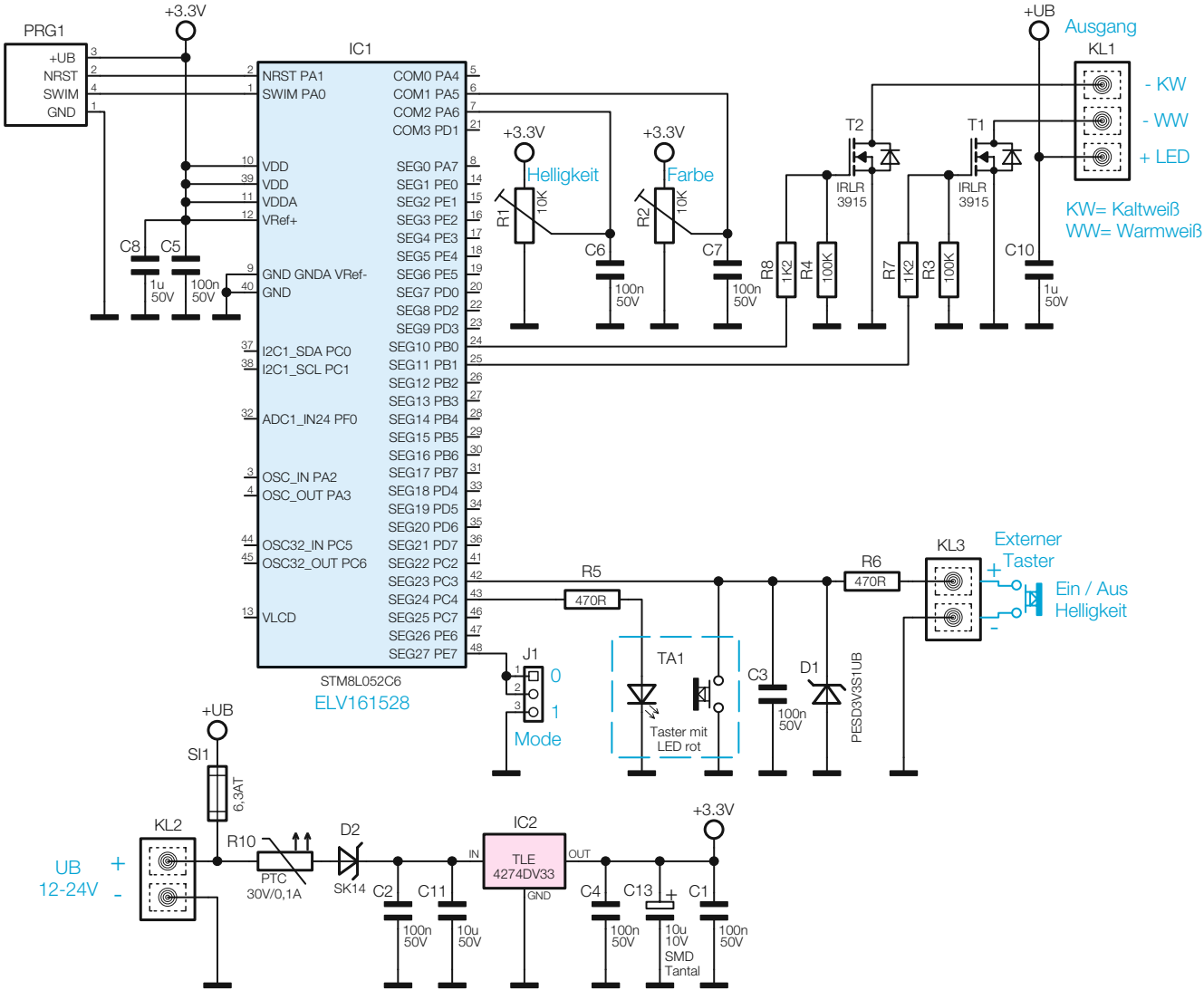
PRG1
+UB
NRST
SWIM
GND
+3.3V
IC1
NRST PA1
SWIM PA0
VDD
VDD
VDDA
VRef+
GND GNDA VRef-
GND
I2C1_SDA PC0
I2C1_SCL PC1
ADC1_IN24 PF0
OSC_IN PA2
OSC_OUT PA3
OSC32_IN PC5
OSC32_OUT PC6
VLCD
COM0 PA4
COM1 PA5
COM2 PA6
COM3 PD1
SEG0 PA7
SEG1 PE0
SEG2 PE1
SEG3 PE2
SEG4 PE3
SEG5 PE4
SEG6 PE5
SEG7 PD0
SEG8 PD2
SEG9 PD3
SEG10 PB0
SEG11 PB1
SEG12 PB2
SEG13 PB3
SEG14 PB4
SEG15 PB5
SEG16 PB6
SEG17 PB7
SEG18 PD4
SEG19 PD5
SEG20 PD6
SEG21 PD7
SEG22 PC2
SEG23 PC3
SEG24 PC4
SEG25 PC7
SEG26 PE6
SEG27 PE7
STM8L052C6
ELV161528
C8
C5
1u
50V
100n
50V
+3.3V
Helligkeit
R1
10K
C6
100n
50V
+3.3V
Farbe
R2
10K
C7
100n
50V
R8
1K2
R4
100K
T2
IRLR
3915
R7
1K2
R3
100K
T1
IRLR
3915
C10
1u
50V
+UB
Ausgang
KL1
- KW
- WW
+ LED
KW= Kaltweiß
WW= Warmweiß
R5
470R
R6
470R
KL3
Externer
Taster
+
-
Ein / Aus
Helligkeit
J1
1
2
3
0
1
Mode
TA1
Taster mit
LED rot
C3
100n
50V
D1
PESD3V3S1UB
+UB
SI1
6,3AT
KL2
UB
12-24V
+
-
R10
PTC
30V/0,1A
D2
SK14
C2
100n
50V
C11
10u
50V
IC2
TLE
4274DV33
IN
OUT
GND
C4
100n
50V
C13
10u
10V
SMD
Tantal
+3.3V
C1
100n
50V