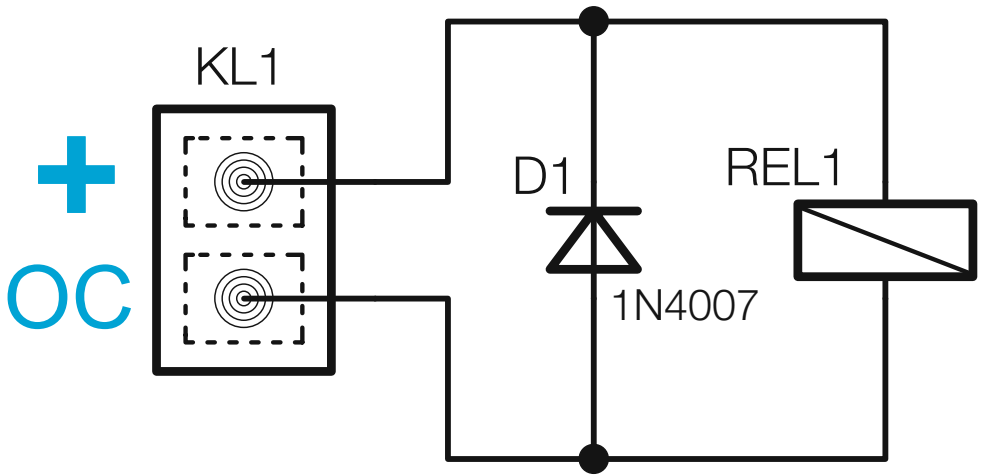
KL1
+
OC
D1
1N4007
REL1

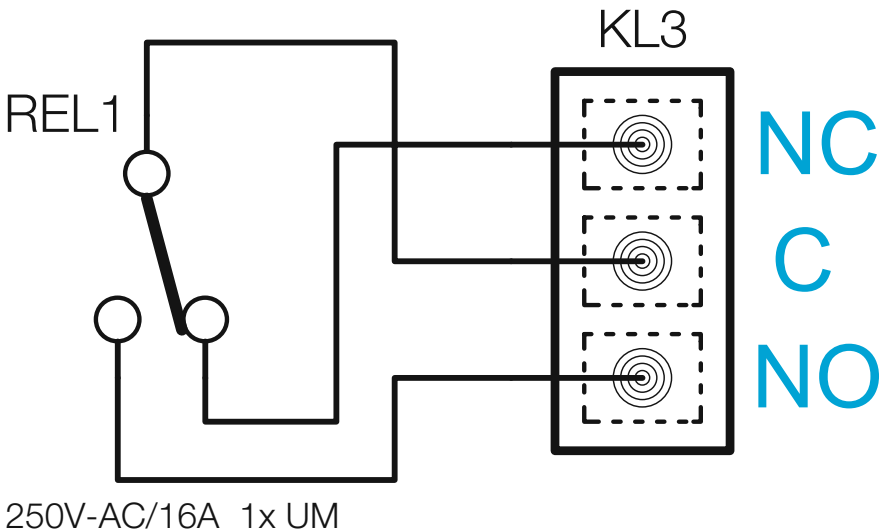
REL1
KL3
NC
C
NO
250V-AC/16A 1x UM

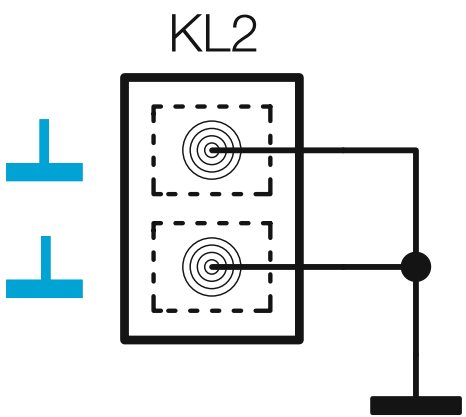
KL2