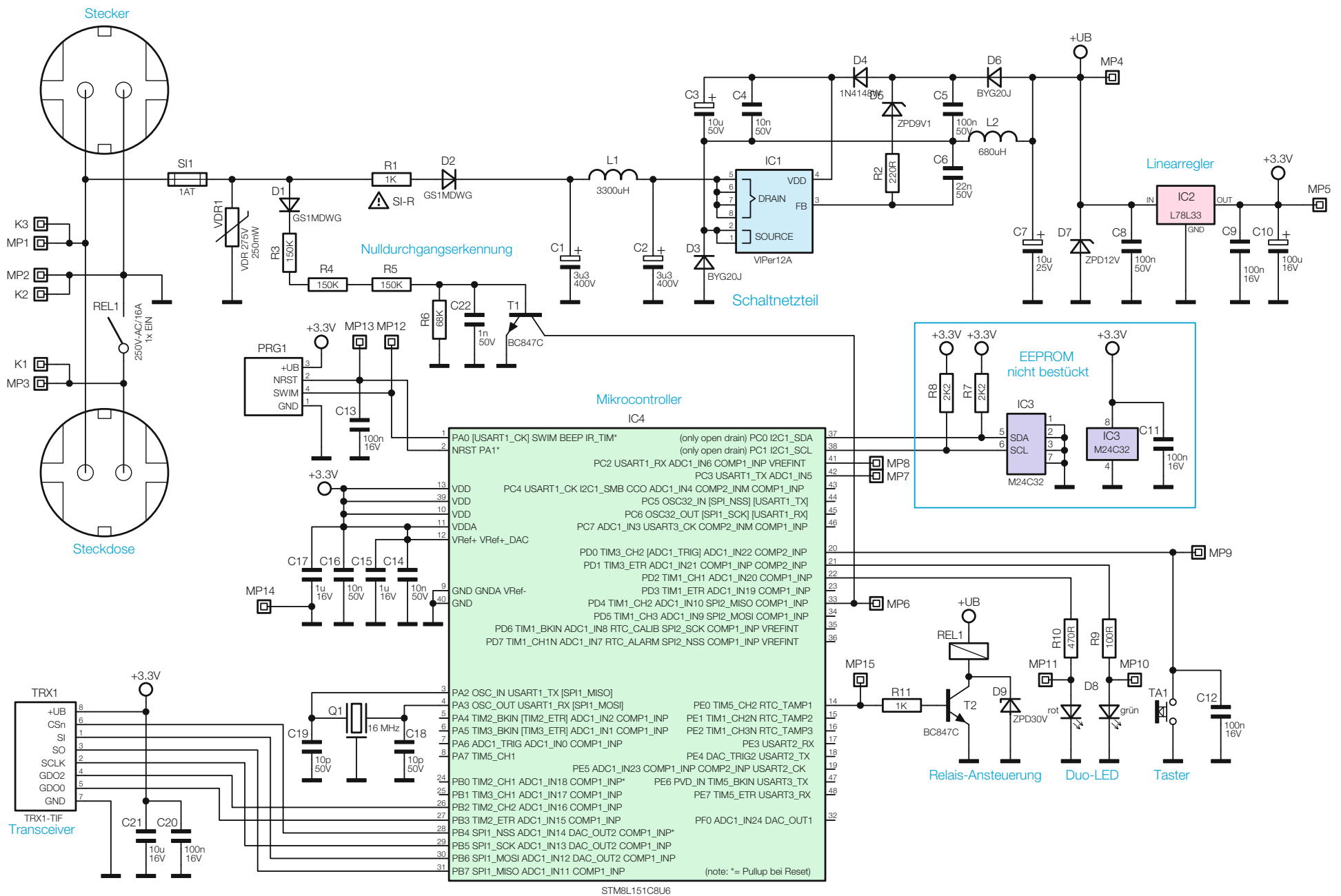
Stecker
Steckdose
K3
MP1
MP2
K2
K1
MP3
REL1
250V-AC/16A
1x EIN
SI1
1AT
VDR1
VDR 275V
250mW
D1
GS1MDWG
R3
150K
R1
1K
SI-R
D2
GS1MDWG
R4
150K
R5
150K
Nulldurchgangserkennung
R6
68K
C22
1n
50V
T1
BC847C
L1
3300uH
C1
3u3
400V
C2
3u3
400V
D3
BYG20J
C3
10u
50V
C4
10n
50V
IC1
VDD
DRAIN
FB
SOURCE
VIPer12A
Schaltnetzteil
D4
1N4148W
D5
ZPD9V1
R2
220R
D6
BYG20J
C5
100n
50V
L2
680uH
C6
22n
50V
+UB
MP4
C7
10u
25V
D7
ZPD12V
C8
100n
50V
Linearregler
IC2
L78L33
IN
OUT
GND
C9
100n
16V
C10
100u
16V
+3.3V
MP5
PRG1
+UB
NRST
SWIM
GND
+3.3V
MP13
MP12
C13
100n
16V
Mikrocontroller
IC4
PA0 [USART1_CK] SWIM BEEP IR_TIM*
NRST PA1*
VDD
VDD
VDD
VDDA
VRef+ VRef+_DAC
GND GNDA VRef-
GND
PA2 OSC_IN USART1_TX [SPI1_MISO]
PA3 OSC_OUT USART1_RX [SPI1_MOSI]
PA4 TIM2_BKIN [TIM2_ETR] ADC1_IN2 COMP1_INP
PA5 TIM3_BKIN [TIM3_ETR] ADC1_IN1 COMP1_INP
PA6 ADC1_TRIG ADC1_IN0 COMP1_INP
PA7 TIM5_CH1
PB0 TIM2_CH1 ADC1_IN18 COMP1_INP*
PB1 TIM3_CH1 ADC1_IN17 COMP1_INP
PB2 TIM2_CH2 ADC1_IN16 COMP1_INP
PB3 TIM2_ETR ADC1_IN15 COMP1_INP
PB4 SPI1_NSS ADC1_IN14 DAC_OUT2 COMP1_INP*
PB5 SPI1_SCK ADC1_IN13 DAC_OUT2 COMP1_INP
PB6 SPI1_MOSI ADC1_IN12 DAC_OUT2 COMP1_INP
PB7 SPI1_MISO ADC1_IN11 COMP1_INP
(only open drain) PC0 I2C1_SDA
(only open drain) PC1 I2C1_SCL
PC2 USART1_RX ADC1_IN6 COMP1_INP VREFINT
PC3 USART1_TX ADC1_IN5
PC4 USART1_CK I2C1_SMB CCO ADC1_IN4 COMP2_INM COMP1_INP
PC5 OSC32_IN [SPI_NSS] [USART1_TX]
PC6 OSC32_OUT [SPI1_SCK] [USART1_RX]
PC7 ADC1_IN3 USART3_CK COMP2_INM COMP1_INP
PD0 TIM3_CH2 [ADC1_TRIG] ADC1_IN22 COMP2_INP
PD1 TIM3_ETR ADC1_IN21 COMP1_INP COMP2_INP
PD2 TIM1_CH1 ADC1_IN20 COMP1_INP
PD3 TIM1_ETR ADC1_IN19 COMP1_INP
PD4 TIM1_CH2 ADC1_IN10 SPI2_MISO COMP1_INP
PD5 TIM1_CH3 ADC1_IN9 SPI2_MOSI COMP1_INP
PD6 TIM1_BKIN ADC1_IN8 RTC_CALIB SPI2_SCK COMP1_INP VREFINT
PD7 TIM1_CH1N ADC1_IN7 RTC_ALARM SPI2_NSS COMP1_INP VREFINT
PE0 TIM5_CH2 RTC_TAMP1
PE1 TIM1_CH2N RTC_TAMP2
PE2 TIM1_CH3N RTC_TAMP3
PE3 USART2_RX
PE4 DAC_TRIG2 USART2_TX
PE5 ADC1_IN23 COMP1_INP COMP2_INP USART2_CK
PE6 PVD_IN TIM5_BKIN USART3_TX
PE7 TIM5_ETR USART3_RX
PF0 ADC1_IN24 DAC_OUT1
(note: *= Pullup bei Reset)
STM8L151C8U6
+3.3V
+3.3V
+3.3V
EEPROM
nicht bestückt
R8
2K2
R7
2K2
IC3
SDA
SCL
M24C32
IC3
M24C32
C11
100n
16V
MP8
MP7
MP9
MP6
+UB
REL1
MP15
R11
1K
T2
BC847C
D9
ZPD30V
R10
470R
R9
100R
MP11
MP10
D8
rot
grün
TA1
C12
100n
16V
Relais-Ansteuerung
Duo-LED
Taster
TRX1
+UB
CSn
SI
SO
SCLK
GDO2
GDO0
GND
TRX1-TIF
Transceiver
+3.3V
Q1
16 MHz
C19
10p
50V
C18
10p
50V
C21
10u
16V
C20
100n
16V
MP14
C17
1u
16V
C16
10n
50V
C15
1u
16V
C14
10n
50V