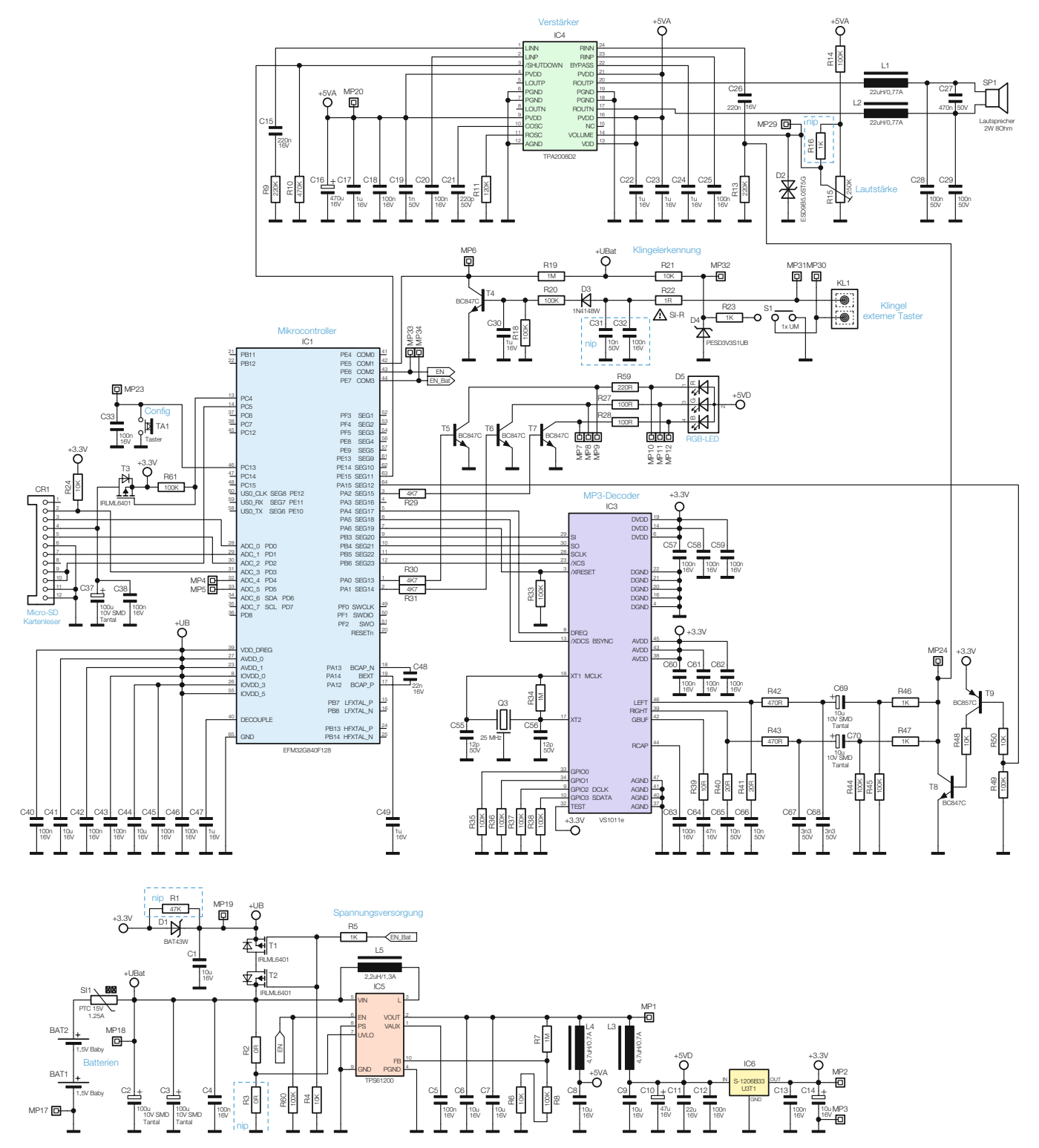
Verstärker
IC4
TPA2008D2
LINN
LINP
/SHUTDOWN
PVDD
LOUTP
PGND
PGND
LOUTN
PVDD
COSC
ROSC
AGND
RINN
RINP
BYPASS
PVDD
ROUTP
PGND
PGND
ROUTN
PVDD
NC
VOLUME
VDD
+5VA
MP20
C15 220n 16V
R9 220K
R10 470K
C16 470u 16V
C17 1u 16V
C18 100n 16V
C19 1n 50V
C20 100n 16V
C21 220p 50V
R11 120K
C22 1u 16V
C23 1u 16V
C24 1u 16V
C25 100n 16V
R13 220K
C26 220n 16V
R14 100K
L1 22uH/0,77A
L2 22uH/0,77A
C27 470n 50V
SP1
Lautsprecher 2W 8Ohm
MP29
R16 1K
D2 ESD9B5.0ST5G
R15 250K
Lautstärke
C28 100n 50V
C29 100n 50V
Klingelerkennung
MP6
+UBat
R19 1M
R21 10K
MP32
MP31 MP30
KL1
Klingel externer Taster
BC847C T4
R20 100K
D3 1N4148W
R22 1R
SI-R
R23 1K
S1 1x UM
D4 PESD3V3S1UB
C30 1u 16V
R18 100K
C31 10n 50V
C32 100n 16V
nip
Mikrocontroller
IC1
EFM32G840F128
MP33 MP34
EN
EN_Bat
MP23
Config
C33 100n 16V
TA1
Taster
+3.3V
T3 IRLML6401
R61 100K
R24 10K
CR1
Micro-SD Kartenleser
C37 100u 10V SMD Tantal
C38 100n 16V
MP4
MP5
R59 220R
R27 100R
R28 100R
D5
RGB-LED
+5VD
T5 BC847C
T6 BC847C
T7 BC847C
MP7 MP8 MP9
MP10 MP11 MP12
R29 4K7
R30 4K7
R31 4K7
MP3-Decoder
IC3
VS1011e
R33 100K
C57 100n 16V
C58 100n 16V
C59 100n 16V
C60 100n 16V
C61 100n 16V
C62 100n 16V
R34 1M
Q3 25 MHz
C55 12p 50V
C56 12p 50V
R35 100K
R36 100K
R37 100K
R38 100K
R39 10R
R40 2R2
R41 2R2
C63 100n 16V
C64 47n 16V
C65 10n 50V
C66 10n 50V
R42 470R
R43 470R
C69 10u 10V SMD Tantal
C70 10u 10V SMD Tantal
R46 1K
R47 1K
R44 100K
R45 100K
C67 3n3 50V
C68 3n3 50V
MP24
T9 BC857C
T8 BC847C
R48 10K
R50 10K
R49 100K
+UB
C48 22n 16V
C49 1u 16V
C40 100n 16V
C41 10u 16V
C42 100n 16V
C43 100n 16V
C44 10u 16V
C45 100n 16V
C46 100n 16V
C47 1u 16V
Spannungsversorgung
nip
R1 47K
D1 BAT43W
MP19
C1 10u 16V
R5 1K
EN_Bat
T1 IRLML6401
T2 IRLML6401
L5 2,2uH/1,3A
IC5
TPS61200
VIN
EN
PS
UVLO
GND
L
VOUT
VAUX
FB
PGND
SI1 PTC 15V 1,25A
BAT2 1,5V Baby
BAT1 1,5V Baby
Batterien
MP18
MP17
C2 100u 10V SMD Tantal
C3 100u 10V SMD Tantal
C4 100n 16V
R2 0R
R3 0R
R60 100K
R4 10K
C5 100n 16V
C6 10u 16V
C7 10u 16V
R6 10K
R7 1M
R8 100K
C8 10u 16V
L4 4,7µH/0,7A
L3 4,7µH/0,7A
MP1
C9 10u 16V
C10 47u 16V
C11 22u 16V
C12 100n 16V
IC6
S-1206B33 U3T1
IN
OUT
GND
C13 100n 16V
C14 10u 16V
MP2
MP3