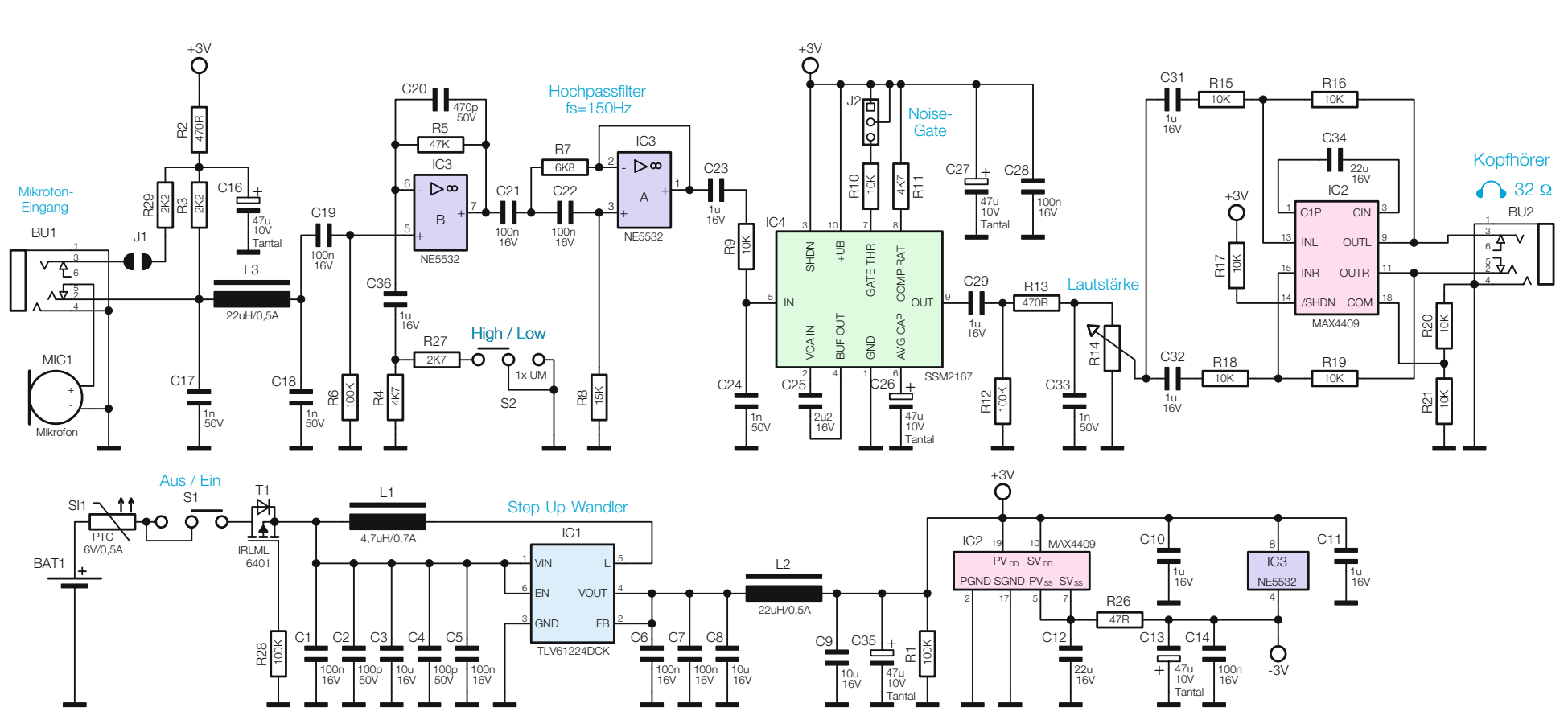
+3V
R2 470R
Mikrofon-Eingang
BU1
J1
R29 2K2
R3 2K2
C16 47u 10V Tantal
L3 22uH/0,5A
MIC1
Mikrofon
C17 1n 50V
C18 1n 50V
C19 100n 16V
R6 100K
C20 470p 50V
R5 47K
IC3 B NE5532
C36 1u 16V
R4 4K7
R27 2K7
High / Low
1x UM
S2
Hochpassfilter fs=150Hz
R7 6K8
C21 100n 16V
C22 100n 16V
IC3 A NE5532
R8 15K
C23 1u 16V
R9 10K
C24 1n 50V
IC4 SSM2167
SHDN +UB GATE THR COMP RAT IN OUT VCA IN BUF OUT GND AVG CAP
C25 2u2 16V
C26 47u 10V Tantal
J2
Noise-Gate
R10 10K
R11 4K7
C27 47u 10V Tantal
C28 100n 16V
C29 1u 16V
R13 470R
R12 100K
C33 1n 50V
Lautstärke
R14
C31 1u 16V
R15 10K
R16 10K
C34 22u 16V
IC2 MAX4409
C1P CIN INL OUTL INR OUTR /SHDN COM
R17 10K
C32 1u 16V
R18 10K
R19 10K
R20 10K
R21 10K
Kopfhörer 32 Ω
BU2
Aus / Ein
S1
SI1 PTC 6V/0,5A
BAT1
T1 IRLML 6401
L1 4,7uH/0.7A
R28 100K
C1 100n 16V
C2 100p 50V
C3 10u 16V
C4 100p 50V
C5 100n 16V
Step-Up-Wandler
IC1 TLV61224DCK
VIN EN GND L VOUT FB
C6 100n 16V
C7 100n 16V
C8 10u 16V
L2 22uH/0,5A
C9 10u 16V
C35 47u 10V Tantal
R1 100K
IC2 MAX4409
PV DD SV DD PGND SGND PV SS SV SS
C10 1u 16V
C12 22u 16V
R26 47R
C13 47u 10V Tantal
C14 100n 16V
IC3 NE5532
C11 1u 16V
-3V