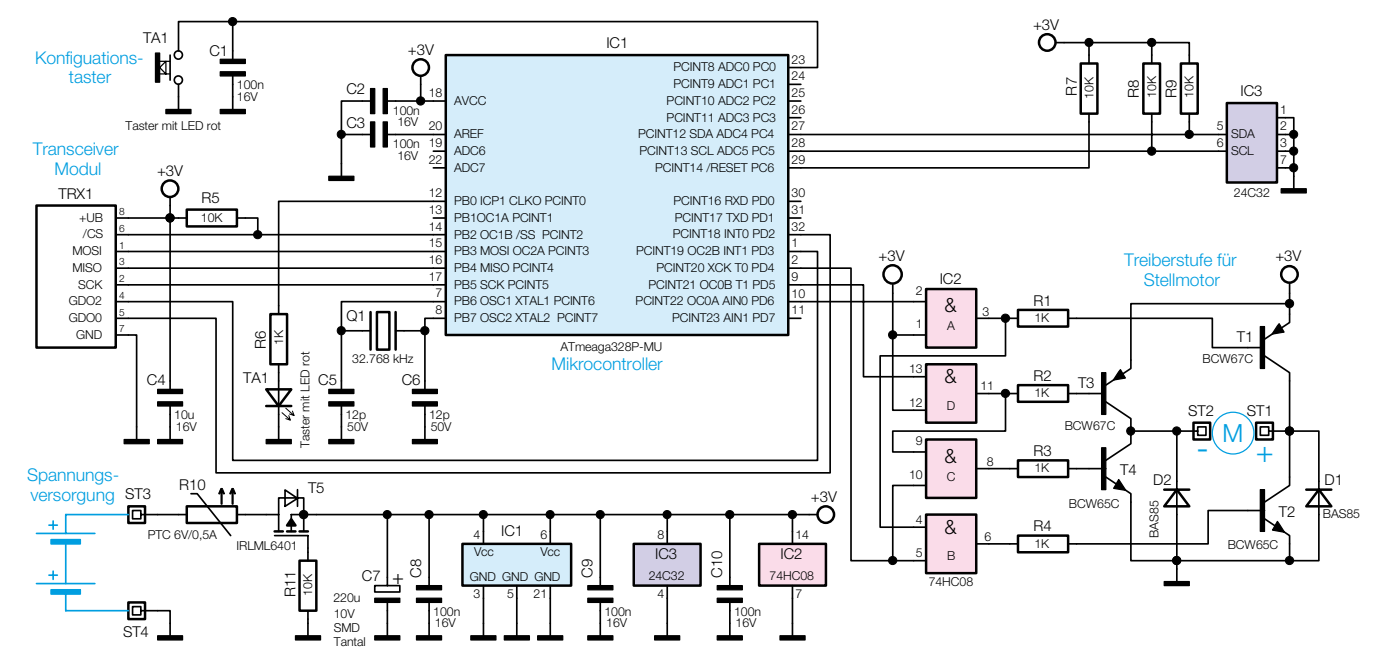
Konfiguations-taster
TA1
C1
100n 16V
Taster mit LED rot
+3V
IC1
C2
C3
100n 16V
AVCC
AREF
ADC6
ADC7
PCINT8 ADC0 PC0
PCINT9 ADC1 PC1
PCINT10 ADC2 PC2
PCINT11 ADC3 PC3
PCINT12 SDA ADC4 PC4
PCINT13 SCL ADC5 PC5
PCINT14 /RESET PC6
PB0 ICP1 CLKO PCINT0
PB1OC1A PCINT1
PB2 OC1B /SS PCINT2
PB3 MOSI OC2A PCINT3
PB4 MISO PCINT4
PB5 SCK PCINT5
PB6 OSC1 XTAL1 PCINT6
PB7 OSC2 XTAL2 PCINT7
PCINT16 RXD PD0
PCINT17 TXD PD1
PCINT18 INT0 PD2
PCINT19 OC2B INT1 PD3
PCINT20 XCK T0 PD4
PCINT21 OC0B T1 PD5
PCINT22 OC0A AIN0 PD6
PCINT23 AIN1 PD7
ATmeaga328P-MU
Mikrocontroller
R7 10K
R8 10K
R9 10K
IC3
SDA
SCL
24C32
Transceiver Modul
TRX1
+UB
/CS
MOSI
MISO
SCK
GDO2
GDO0
GND
R5 10K
R6 1K
TA1
Taster mit LED rot
Q1
32.768 kHz
C4 10u 16V
C5 12p 50V
C6 12p 50V
Treiberstufe für Stellmotor
IC2
74HC08
R1 1K
R2 1K
R3 1K
R4 1K
T1 BCW67C
T2 BCW65C
T3 BCW67C
T4 BCW65C
ST1
ST2
M
D1 BAS85
D2 BAS85
Spannungs-versorgung
ST3
ST4
R10
PTC 6V/0,5A
T5
IRLML6401
R11 10K
C7 220u 10V SMD Tantal
C8 100n 16V
C9 100n 16V
C10 100n 16V
IC1
Vcc
GND
IC3
24C32
IC2
74HC08