EN150SW

Euro power cord 1.5m black

date/contact:	100506/CMA
finishing:	NBR
last update:	191211/MAP
drawing:	94272
unit:	- / mm
tolerance:	-
page:	1/1

EVE GmbH
Hollefeldstr. 16
48282 Emsdetten
Tel.: +49 (0) 25 72 / 93 51 - 0
Fax: +49 (0) 25 72 / 93 51 - 24
www.eve.de • info@eve.de

konform RoHS compliant

eve GmbH ELEKTRONIK DISTRIBUTION

Technical Requirements:
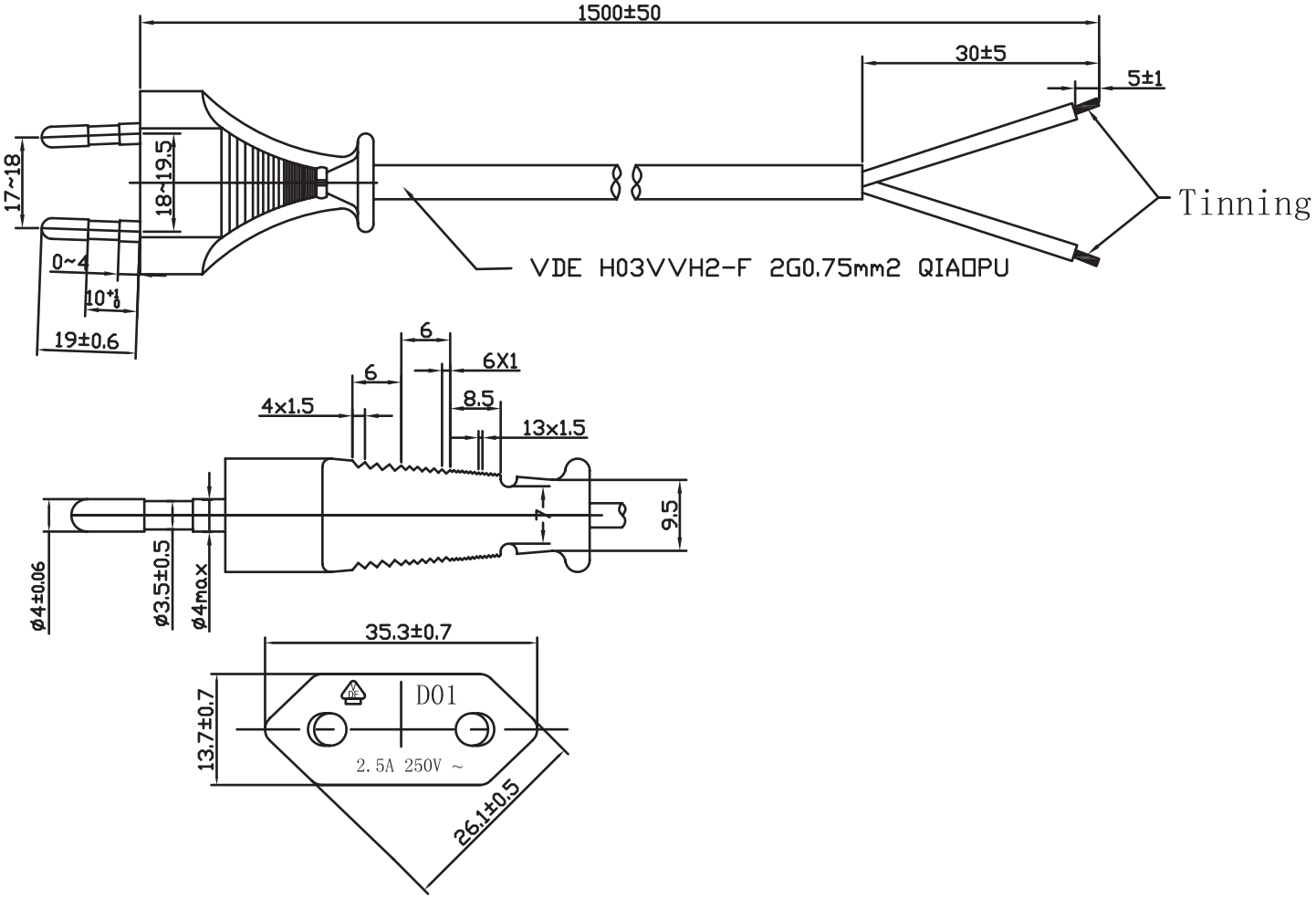
1. Injection molding surface should be smooth, no cracks, no material shortage, no swelling, no obvious reduction, no scratches, no burr defects.
2. Compressive strength: Between the L and N pole should bear 2000V50Hz AC 1 minute(when the test voltage to 2500V, test time can be shortened to 1s),With no breakdown and flashover phenomenon.
3. All words with a high 2.5mm, Out of plane 0.2 ~ 0.3mm.
4. Tolerances in accordance with GB / T 14486-95MT2 level precision.