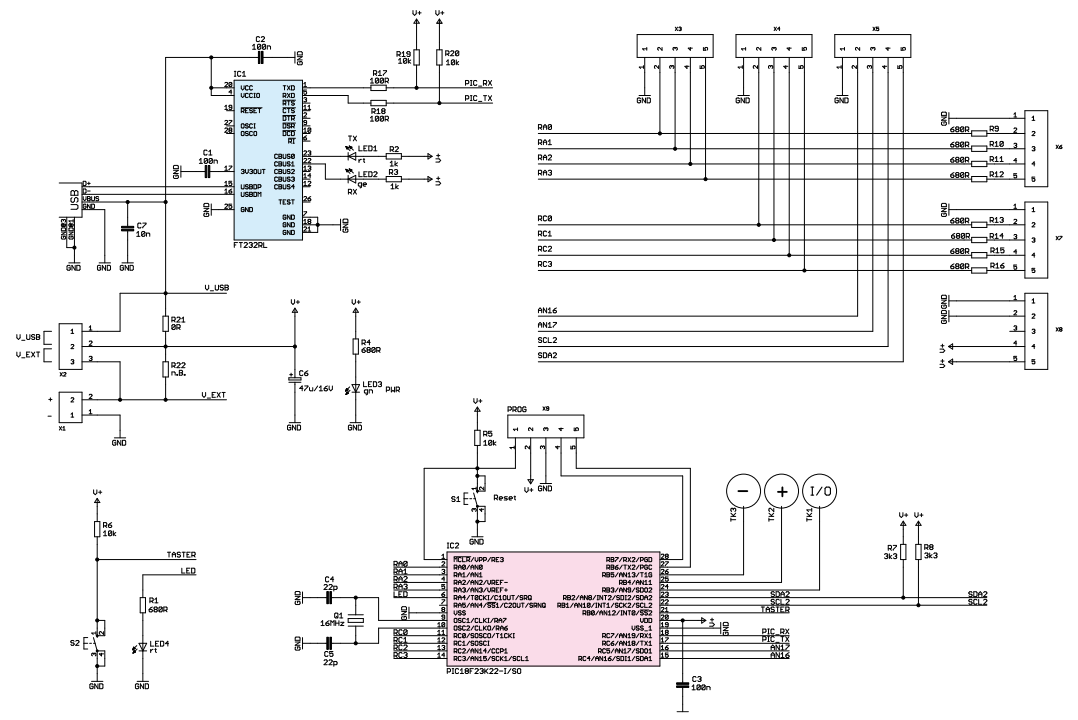
IC1
FT232RL
VCC
VCCIO
RESET
OSCI
OSCO
3V3OUT
USBDP
USBDM
GND
TEST
TXD
RXD
RTS
CTS
DTR
DSR
DCD
RI
CBUS0
CBUS1
CBUS2
CBUS3
CBUS4
C1 100n
C2 100n
C7 10n
R17 100R
R18 100R
R19 10k
R20 10k
R2 1k
R3 1k
LED1 r1
LED2 ge
TX
RX
PIC_RX
PIC_TX
V_USB
V_EXT
R21 0R
R22 NoBL
X2
X1
C6 47u/16V
R4 680R
LED3 gn
PWR
X3
X4
X5
X6
X7
X8
RA0
RA1
RA2
RA3
RC0
RC1
RC2
RC3
AN16
AN17
SCL2
SDA2
R9 680R
R10 680R
R11 680R
R12 680R
R13 680R
R14 680R
R15 680R
R16 680R
PROG X9
R5 10k
S1
Reset
IC2
PIC18F23K22-I/SO
MCLR/VPP/RE3
RA0/AN0
RA1/AN1
RA2/AN2/VREF-
RA3/AN3/VREF+
RA4/T0CKI/C1OUT/SRQ
RA5/AN4/SS1/C2OUT/SRNQ
VSS
OSC1/CLKI/RA7
OSC2/CLKO/RA6
RC0/SOSCO/T1CKI
RC1/SOSCI
RC2/AN14/CCP1
RC3/AN15/SCK1/SCL1
RB7/KX2/PGD
RB6/TX2/PGC
RB5/AN13/T1G
RB4/AN11
RB3/AN9/SDO2
RB2/AN8/INT2/SDI2/SDA2
RB1/AN10/INT1/SCK2/SCL2
RB0/AN12/INT0/SS2
VDD
VSS_1
RC7/AN19/RX1
RC6/AN18/TX1
RC5/AN17/SDO1
RC4/AN16/SDI1/SDA1
LED
TASTER
C4 22p
C5 22p
Q1 16MHz
C3 100n
R6 10k
R1 680R
S2
LED4 r1
TK3
TK2
TK1
I/O
R7 3k3
R8 3k3
SDA2
SCL2
PIC_RX
PIC_TX
AN17
AN16
GND
V+